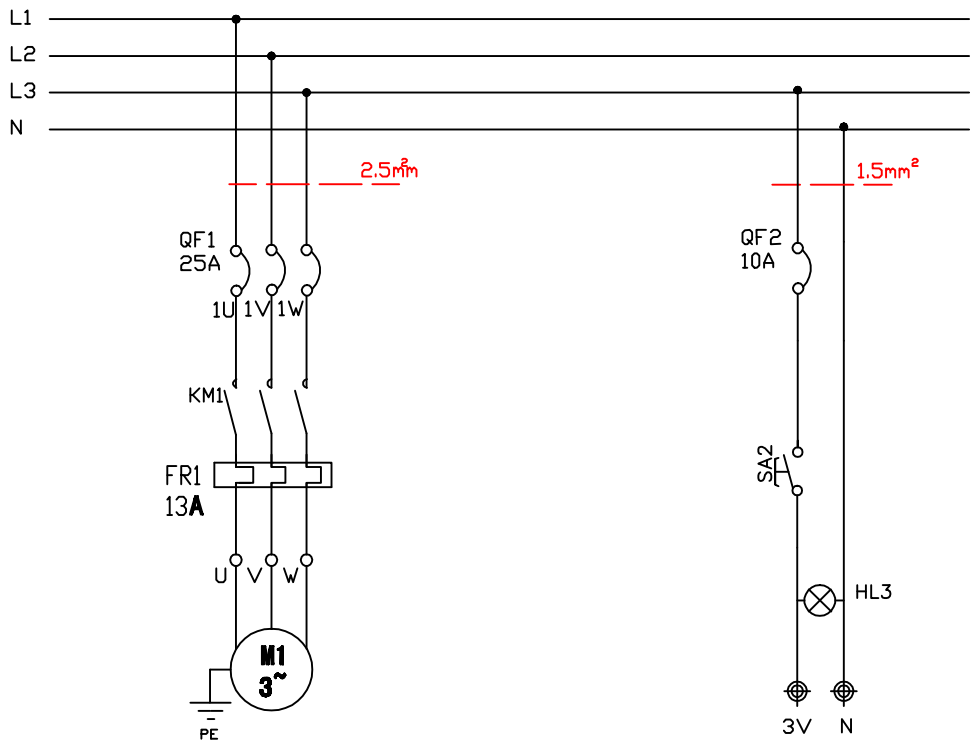

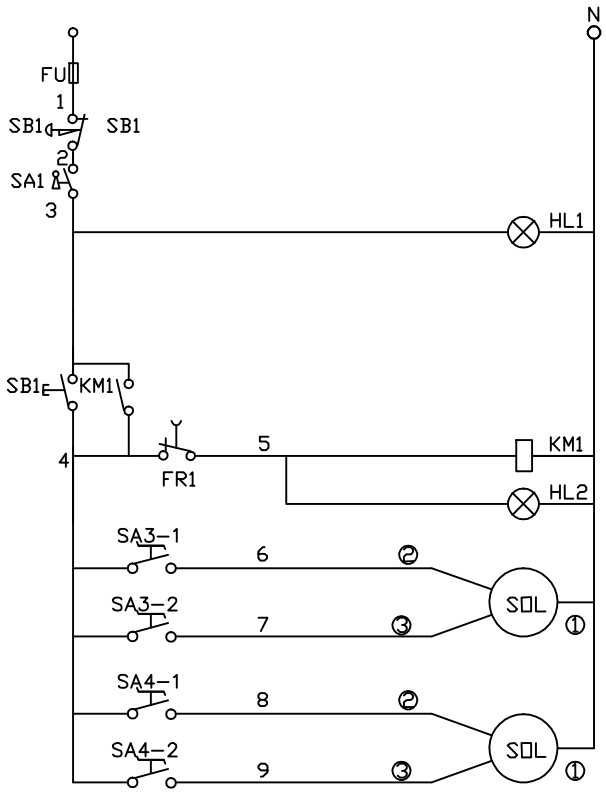

U	V	W	PE	3U	N	6	N	7	8	N	9	PE	N	L1	L2	L3
风机				照明		风门1			风门2			电源输入				
3X2.5MM²+1.5MM²				2X1.5MM²		2X0.75MM²			2X0.75MM²			3X4MM²+2.5MM²				

GUANGLI

GL600 series Guangli Brand
Automobile electric circuit diagram
5.5KW+Overhead\Side lighting

First page	File name	
Total page 1	Software	CAD2004